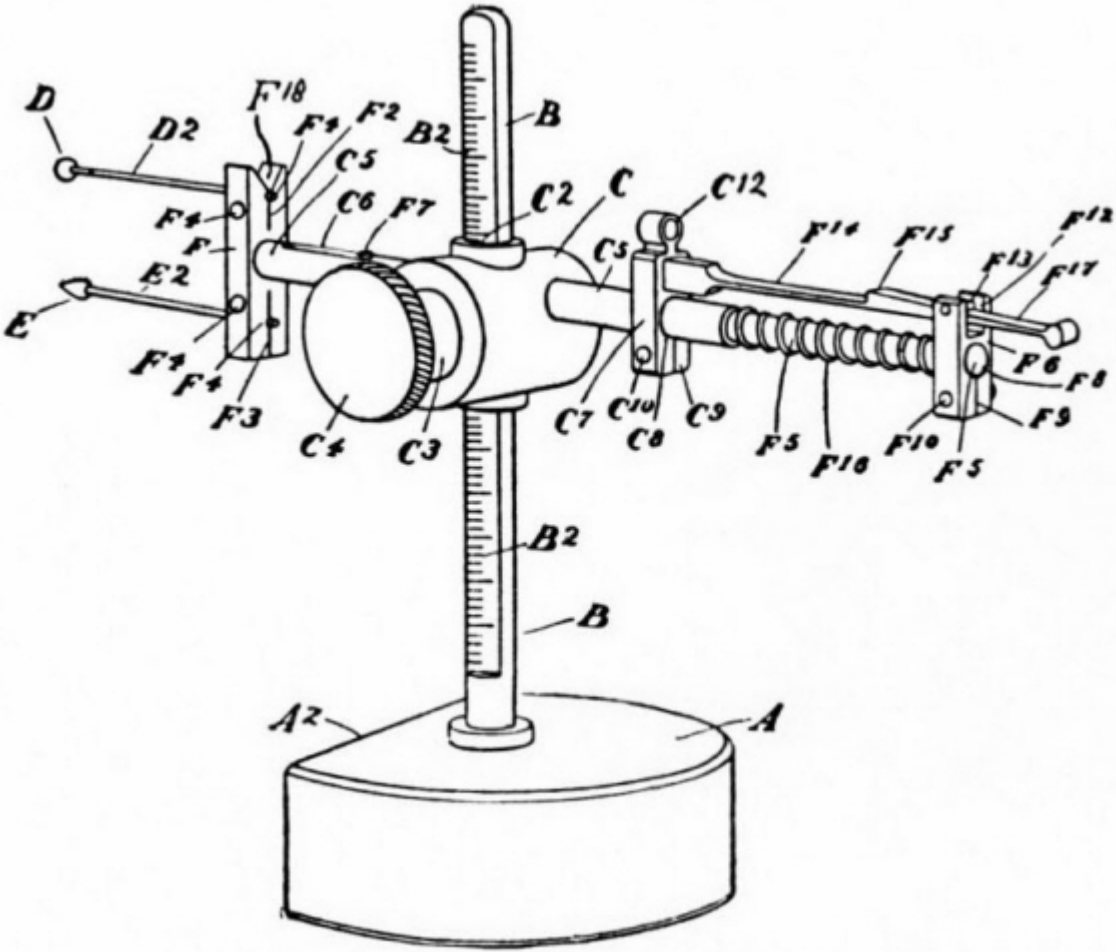

FIG. 148.—Sweet eye localizer