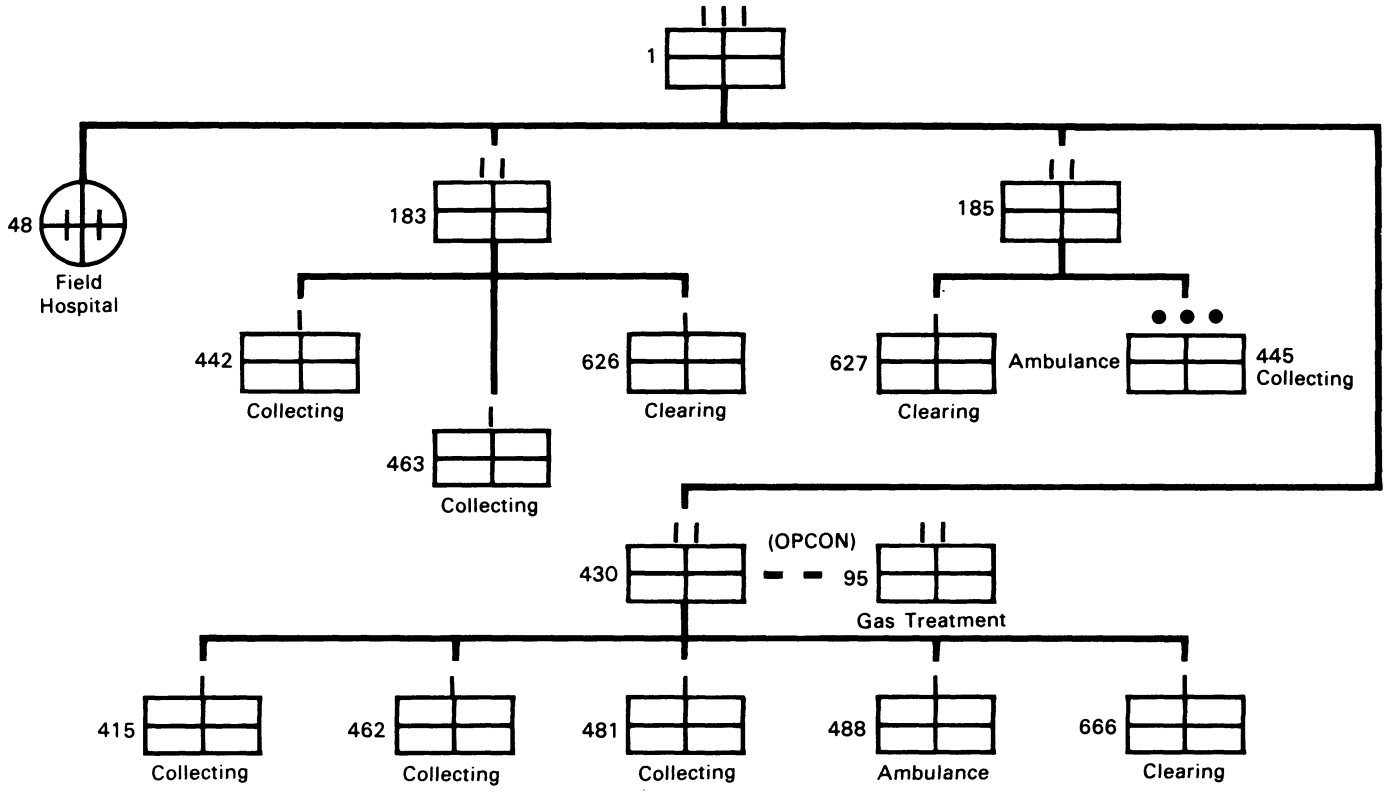

Figure 4. Task organization, 1st Medical Group, 1 May 1945