CHART 5—MEDICAL COMMAND AND STAFF STRUCTURE, U.S. ARMY, VIETNAM, 1 MARCH 1970

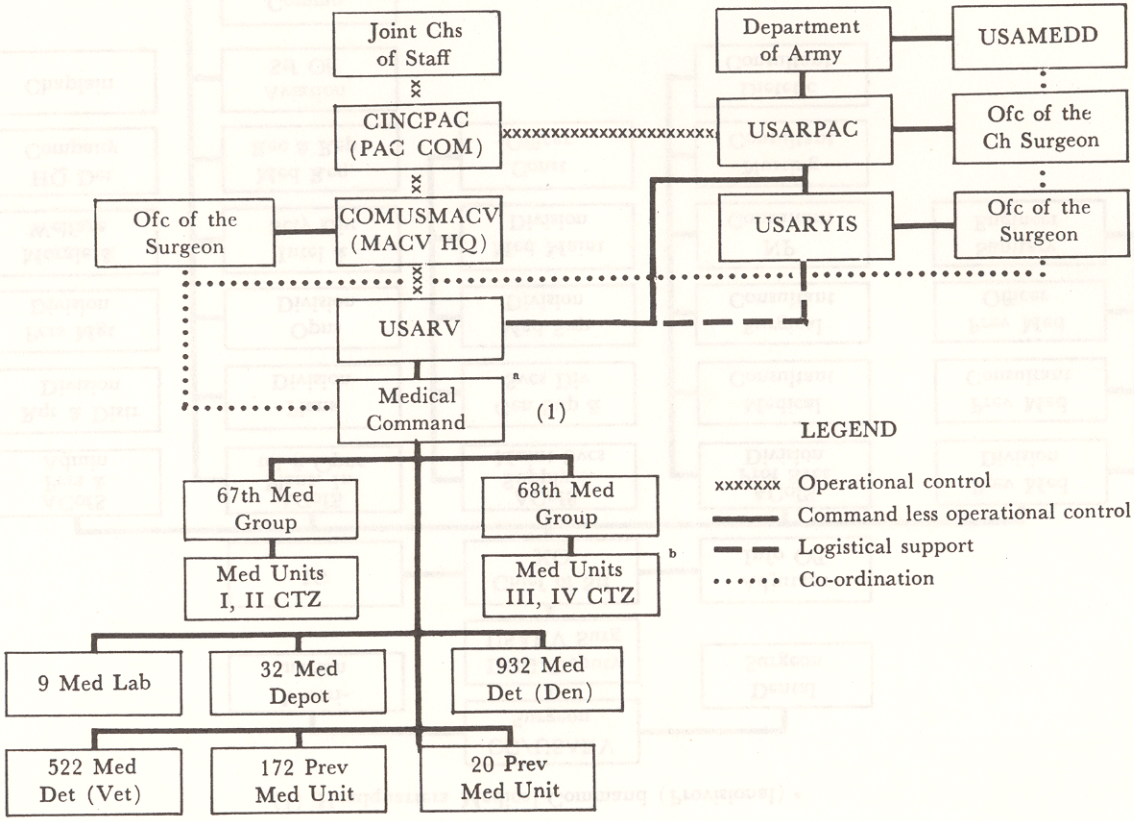
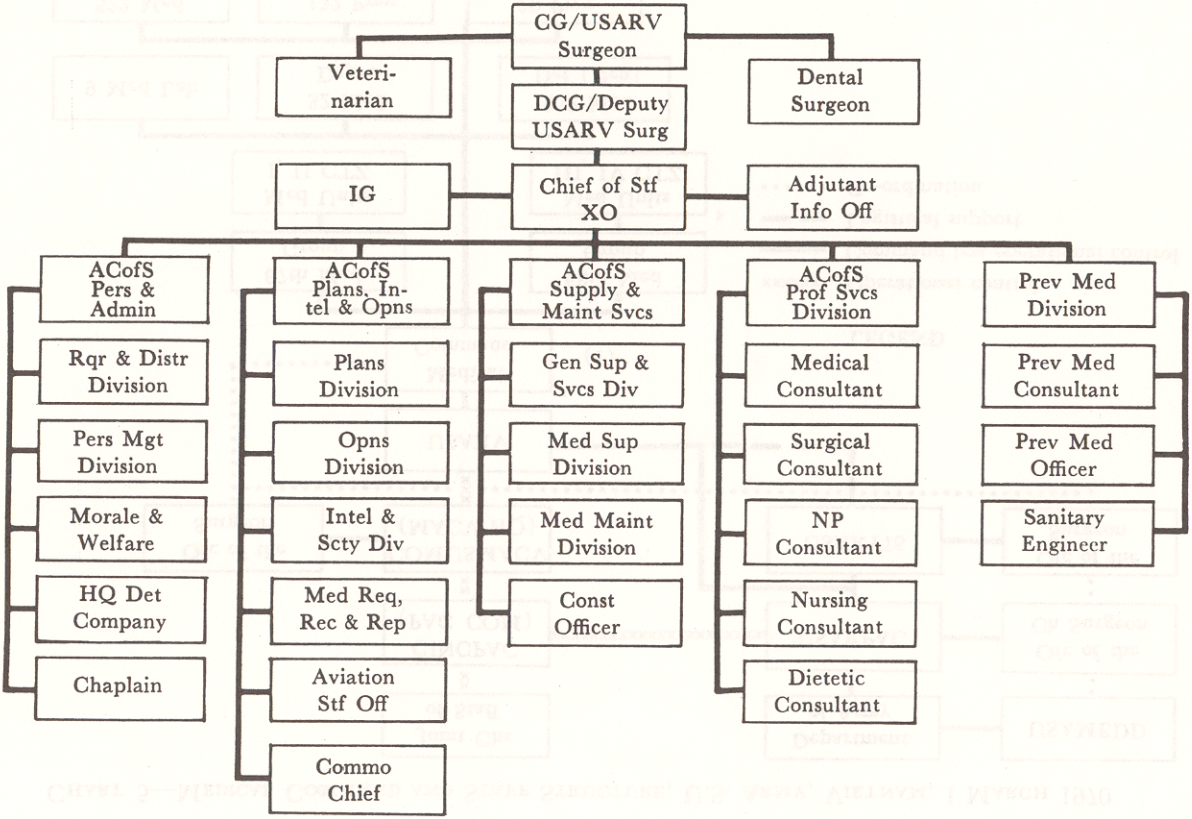
(1) Headquarters Medical Command (Provisional)