Medical Logistics Support to Desert Storm

Maj Angel E. Cintron, MS*

Maj George D. Magee, MS**

This article provides an overview of the medical logistics support provided by the Army during Operation Desert Storm. The article covers the establishment of a medical logistics structure in the theater and the medical logistics effort associated with fielding the latest generation of hospitals, Deployable Medical Systems (DEPMEDS), to the Army hospital units. At the end, the article points out some medical logistics "lessons learned" from Operations Desert Shield/Storm.

Desert Storm represented the most rapid build-up of forces, to include supporting medical forces, in our nation's history. Right from the initial mobilization, deployment and redeployment of the forces, the long air and sea lines of communication and the harsh operational environment of the Southwest Asian desert presented a formidable challenge for medical logistics.

The medical logistics support to Desert Storm can be described by tracking two separate but interrelated challenges facing our logistics support structures. The first was the challenge of deploying and equipping the hospital force going to the theater, and the second was the establishment of a medical sustainment structure in theater and the linking of that structure to support bases in CONUS and Europe. The scope of each of these efforts and the interrelationship between these challenges changed dramatically with the November 1990 decision to greatly increase the size of the deployed force.

The establishment of the medical sustainment structure and the linkages with the supporting CONUS and European bases can best be described by tracking through time the medical logistics support units deployed, the command and control relationships that developed and the critical support issues that arose.

*Chief, Plans, Doctrine and Materiel Development Branch, Logistics Division, Office of the Surgeon General, Washington, DC 289-8060. Served with the DEPMEDS Consolidated Staging Facility during Operation Desert Shield/Storm.

**Deputy Director of Medical Logistics, Office of the Assistant Secretary of Defense (Health Affairs), Washington DC 224-4157. Was assigned to the Logistics Division, Office of The Surgeon General, Washington, DC.

Deployment

The 32d Medical Supply, Optical and Maintenance (MEDSOM) Battalion was the first medical logistics unit to deploy to theater. The 32d MEDSOM operated within the 44th Medical Brigade of XVIII Corps' 1st Corps Support Command (COSCOM) (Fig 1). The 32d MEDSOM arrived in theater in late August 1990. The CENTCOM planning called for the Army to assume theater-wide responsibility for medical logistics support under a Single Integrated Materiel Management (SIMM) concept by C + 60 (early October). Initial support to early deploying medical units, which were primarily Air Force Air Transportable Hospitals, was accomplished by the US Army Medical Materiel Center, Europe (USAMMCE) by means of direct air shipments to the supported unit.

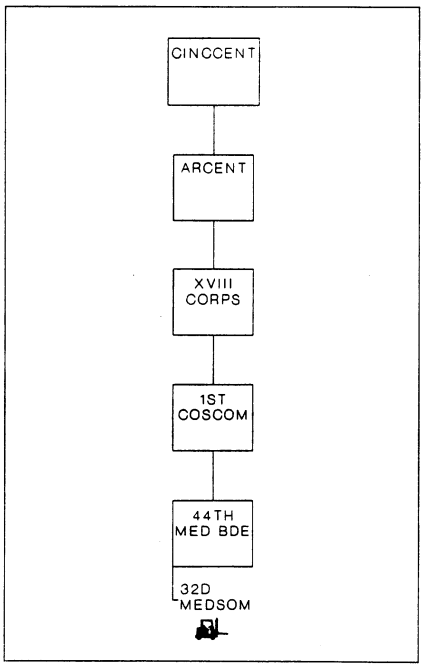

Figure 1. Desert Storm — Initial Class VIII Chain of Command.

The early operations of the 32d were characterized by frustration in finding suitable warehousing facilities to support the theater. A warehouse was located in Dhahran and support operations were begun using materiel that was prepositioned in theater, but had to be stopped because of host nation sensitivities to having a military operation in close proximity to a religiously significant location. This caused the operation to move to temporary facilities at the port in Ad Damman. By early October the theater medical logistics operation had finally been located in what turned out to be the permanent location in warehouse facilities near Ad Damman. The early support operations were characterized by the use of push packages. Sick Call Resupply and Trauma Treatment Resupply sets were assembled at Defense Depot Mechanicsburg, PA (DDMP), and at USAMMCE for delivery to theater. Air shipment was the primary means of moving medical supplies to theater from both CONUS and Europe.

By C + 60 the 32d was performing as the single integrated manager for medical supplies for the theater. The 32d initially operated using the medical logistics module of the Theater Army Medical Management Information System (TAMMIS) running on the Army Tactical ACCS (desktop size) computer. It quickly became apparent that the volume of transactions would overwhelm the capabilities of the TAMMIS/ATACCS configuration. In order to provide the necessary automation support for the theater, a CTASC II hardware (truck and trailer mounted MINI-computer) system operating TAMMIS was tested

and deployed to theater on C+60. The TAMMIS/CTASC II configuration was operational by C+75 and provided outstanding automation support for the duration of the operation.

The advance party of the 47th MEDSOM from Ft. Hood arrived in theater on C+50 and the balance of the unit personnel arrived on C+75. The 32d and the 47th MEDSOMs were then task organized into the US Army Medical Materiel Center, Saudi Arabia (USAMMCSA), which continued to perform the medical supply mission for the theater. At this time, USAMMCSA was under the command and control of the 44th Medical Brigade. By mid-November, USAMMCSA was supporting four plus Army divisions, two Marine divisions, eight Army hospitals, 13 Air Force hospitals and one Navy fleet hospital (ashore), and also providing emergency support to the two Navy hospital ships. The medical supply system was relying less on push package support, and was maturing into a demand-based pull system. The primary channel of support was from USAMMCE. Requirements which could not be filled by USAMMCE were passed to CONUS for direct shipment to theater.

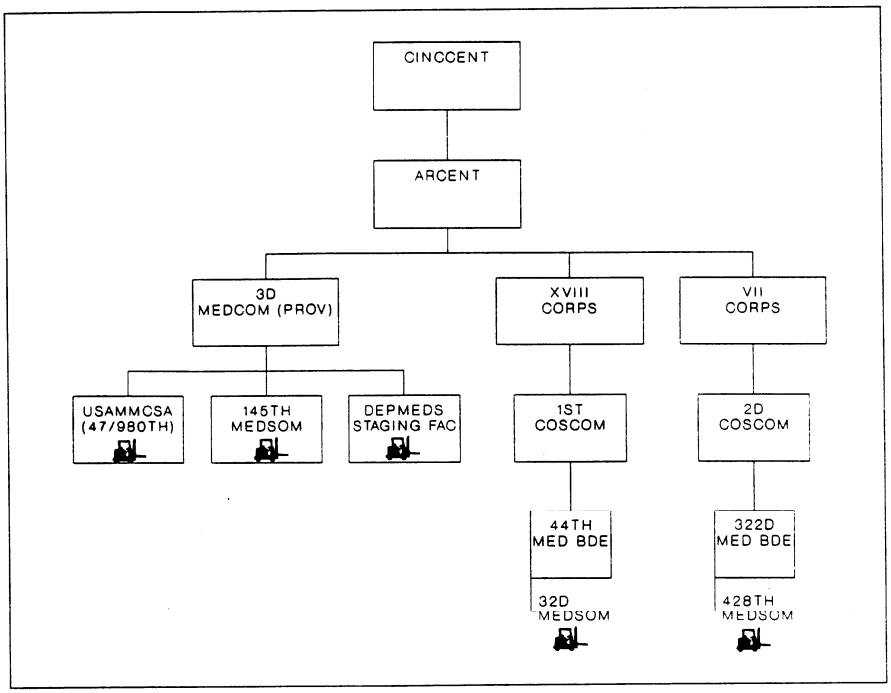

Figure 2. Desert Storm — Final Class VIII Chain of Command.

Command and Control

The decision in late November to deploy additional forces to theater caused significant changes in the size of the medical force needing support and therefore in the medical logistics structure. By late December, the 32d MEDSOM had pulled out of the USAMMCSA operation and moved forward to serve as the Corps MEDSOM supporting the medical units in XVIII Corps. The 428th MEDSOM was deployed from USAREUR to serve as the Corps MEDSOM for VII Corps. The 980th MEDSOM (USAR) was mobilized and deployed to backfill the 32d MEDSOM in the USAMMCSA. The 47th and 980th MEDSOMs (USAMMCSA) became part of the ARCENT 3d MEDCOM Provisional.

USAMMCSA continued to serve as the SIMM for the theater, providing theater level support to the Corps MEDSOMs (32d and 428th), theater support to the medical units of the other services and area support to the Echelons Above Corps (EAC) medical units in the eastern region of the theater. The 145th MEDSOM was also mobilized and deployed to Riyadh to support EAC medical units in the western region of the theater. Figure 2 shows the medical logistics support structure at the time ground hostilities commenced.

Support

The rapid build-up of medical units following the November decision to increase the size of the deployed force changed the nature and scope of medical logistics support in the theater. Push packages in the form of MEDSOM Operational Loads were ordered and shipped in line item configuration from CONUS to theater to provide the initial operating stocks for the 428th MEDSOM, the 32d MEDSOM as it assumed its Corps MEDSOM mission and the 145th MEDSOM. In addition, the stockage levels at the USAMMCSA were increased to support the influx of arriving medical units. By the end of December more than 100 aircraft pallets of medical supplies were moving to theater daily. During both January and February, USAMMCSA processed more than 50,000 requests and issued more than $100 million of medical supplies. By the end of February, the Army medical logistics structure in theater was supporting the medical units in seven-plus Army Divisions, two-plus Marine Divisions, 15 Air Force hospitals, two Navy hospitals and 44 Army hospitals. It was also providing emergency support to the two hospital ships.

The Medical Logistics (Med Log) structure was tasked to provide initial operating stocks to each deploying hospital. The majority of Army hospitals deployed to the theater were issued from Prepositioning of Materiel Configured to Unit Sets (POMCUS) and Primary Mobilization (PRIMOB) stocks. These hospitals had ten days or less of consumable supplies and no potency-dated items. Packages of potency-dated items were pushed to theater to provide three to ten days of start-up supply. The Med Log Structure faced the task of bringing hospital levels to approximately 30 days and building theater levels to 30 days.

The hospitals also developed stockage requirements for significant amounts of medical supplies not originally provided in the Deployable Medical Systems (DEPMEDS) hospitals. More than 50% of the lines ultimately stocked in theater were not authorized on the DEPMEDS data base.

Requisitions from USAMMCSA were passed to USAMMCE. Requisitions which could be filled from USAMMCE stocks were primarily airshipped to theater through Rhein Main AFB, Germany. Selected bulk items were surface-shipped. Requisitions that could not be at least 50% filled at USAMMCE were passed to the Defense Personnel Support Center (DPSC) in CONUS. These orders were shipped directly to theater. The majority of the medical supplies were air-shipped via Dover AFB to Dhahran, but high weight or cube items such as IV solutions were shipped by sea. Medical equipment was shipped primarily via Tinker AFB. Emergency requisitions were shipped via Desert Express from Charleston AFB.

The build-up of medical supplies required a combined flow of approximately 100 aircraft pallets per day to theater from CONUS and Europe. Temporary shortfalls in flow were experienced as DDMP expanded operations to accommodate the increased pallet build requirement. In addition, the lack of adequate airlift during mid-December resulted in shortages and backlogs. However, by the end of December, the flow of medical materiel was faster than could be processed by the USAMMCSA in theater. Figure 3 summarizes the primary transportation channels for medical materiel.

In theater, COSCOM, SUPCOM and contracted ground transportation assets (40ft. flatbeds) were utilized by both the forward deployed MEDSOMS and the EAC MEDSOMS to pick up and push class VIII materiel to designated forward supply points. Military airlift routinely moved "redirected" Class VIII materiel between the two primary aerial ports of debarkation (APOD) at Dhahran and King Kahlid Military City.

DEPMEDS Fielding

At the same time as the medical logistics community was developing and supplying the medical logistics support structure, it was involved in "modernize as you deploy" support to the deploying Army hospitals. Modernization efforts in support of Operation Desert Shield/Storm commenced on Nov 1, 1990 with the decision to modernize four mobile unit self-contained transportable (MUST) configured combat support hospitals and one conventional field hospital already deployed to theater to DEPMEDS configuration. A DEPMEDS combat fielding and training team was organized from personnel at OTSG, the US Army Medical Materiel Agency (USAMMA), and the Academy of Health Sciences (AHS).

Between Nov 1, 1990 and Dec 15, 1990 five DEPMEDS hospitals were shipped from CONUS. The DEPMEDS fielding team received, distributed and fielded these hospitals in Saudi Arabia. As each fielding was completed the DEPMEDS training team performed the necessary new equipment training at each hospital.

The November decision to increase the size of the deployed force resulted in the DEPMEDS fielding team assuming the mission of handing out 24 additional hospitals drawn from both POMCUS and PRIMOB stocks. In addition, the team was tasked with the responsibility for receipt and distribution of "shortage" packages (potency and dated items, X-rays, laboratory items, water distribution systems, etc) that were being airlifted into the theater. This massive effort was accomplished by opening and operating the DEPMEDS Consolidated Staging Facility in Ad Damman.

The Staging Facility allowed for the smooth transition of hospital equipment arriving at both the port in Ad Damman and at the airport in Dhahran. Each hospital was built from a number of pieces arriving from different sources through different modes of transportation. The DEPMEDS Fielding team coordinated the receipt of the primary equipment sets coming from either POMCUS in Europe or PRIMOB in CONUS. These sets were then married with x-ray, laboratory, potency and dated items, and other shortage packages flowing from CONUS. The DEPMEDS fielding team ensured that each unit received all the "pieces" needed for a functional facility. The fielding team then delivered the hospitals to locations primarily north along the Iraq and Kuwait borders. The DEPMEDS

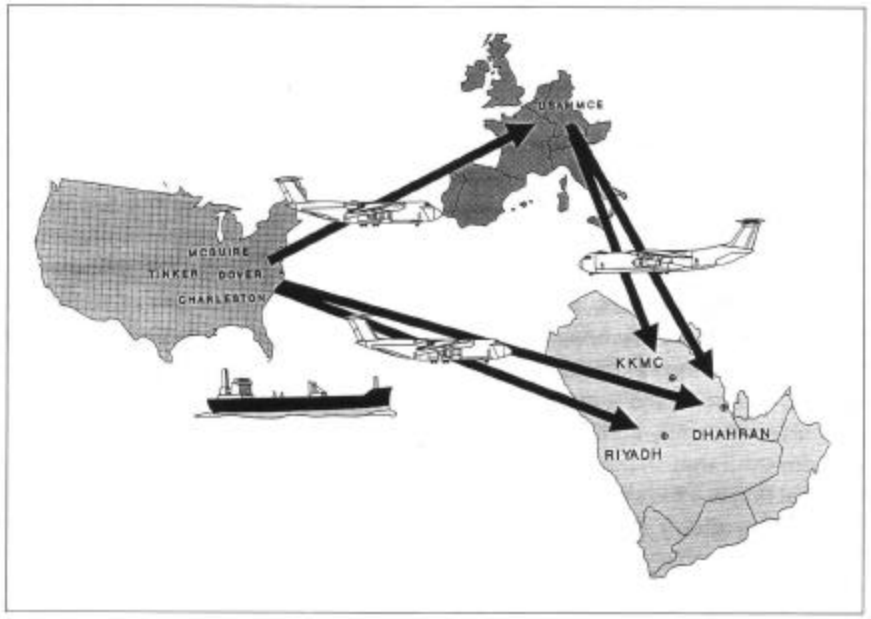

Figure 3. Desert Storm – Med Log Pipelines.

modernization was completed on Feb 15, 1991.

The medical logistics system performed admirably. The fielding of the DEPMEDS equipment in conjunction with the deployment was an unprecedented accomplishment. This was done at the same time that the medical logistics units established the largest regional medical logistics network in the world. At the height of the operation, the CENTCOM Desert Storm hospital structure and supporting medical logistics structure was larger than Health Services Command.

Lessons Learned

Although the medical logistics system met these challenges, a number of problems were encountered that required significant deviation from existing doctrines and structures to successfully support the medical force. The MEDSOM structure was inadequate to handle the volume of support required for the force build-up. The USAMMCSA had to be task-organized from two MEDSOM units to handle the volume of supplies flowing to theater. Desert Shield/Storm validated the need to convert the MEDSOM to the medical logistics support battalion forward and medical logistics battalion rear structure. The task organization of the USAMMCSA approached the structure of the new medical logistics battalion rear contained in the Medical Force 2000 structure.

The task organization of the MEDSOMs into a USAMMCSA was a major "innovative" deviation from existing doctrine. The success of USAMMCSA, providing health service logistical support to all services in the theater should provide the necessary initiative to doctrinally recognize the single integrated medical logistics joint support mission.

There were numerous additional lessons learned in this operation. Some of the more critical medical logistics lessons are as follows:

Medical Unit Basic Load. Medical units generally do not have their full complement of drugs and biologicals (potency and dated items) due in great part to the peacetime cost of maintaining these inventories. It is imperative that medical units deploying take every possible action to obtain their full complement of these items prior to deployment. The medical pipeline is geared to the sustainment of forces in the theater and build up of contingency stocks. This mission is hampered if deploying units must be issued initial issue or operational stocks. The current exception to this policy is Reserve Component Hospital units. The current concept is for potency and dated items to be ordered and pushed to theater by the wholesale program for these units. The lesson learned is to have active medical units maintain and deploy with a full basic load of medical supplies to include potency and dated materiel.

Development of command policy on the scope and range of medical lines stocked in theater. In order to effectively support the theater, the number of medical lines stocked and managed to support combat casualty care must be limited. The DEPMEDS data base should be used as the primary determiner of items to be stocked in theater. In conjunction with this, better medical catalog tools must be available to our units. The inability to rapidly cross-reference from the requirements as expressed by clinical providers to the items available from the supporting MEDSOM naturally lead to a proliferation of requests for similar items.

Transportation support. Transportation support to Army hospitals and Medical Logistics units needs serious review. Without the transportation support provided by contract carriers, it is doubtful that the deployment or the sustainment missions would have been successful.

Lack of organic materiel handling equipment in hospital units. This lack places a tremendous burden on the hospitals ability to operate.

The volume of medical supplies flowing to the theater exceeded everyone's projections. MEDSOM/MED LOG battalions need to be provided with more materiel handling equipment assets; TAMMIS MED LOG operating on the CTASC II hardware; enhanced communications capability at both the hospitals and the MEDSOM/MED LOG battalions (to allow the electronic transmission of medical logistics data between the TAMMIS systems); and, standardized authorized stockage lists for both theater and corps support missions (to allow the MEDSOM/MED LOG battalions to quickly establish a stockage baseline).

Training. Training which reflects the tremendous volumes associated with providing theater level medical logistics support, will be important in providing quality support in any future conflict. ●